INSTALLATION INSTRUCTION
SMART track

FALKENSTEIN

Softclose
for sliding doors
up to 176 lb (80 kg)

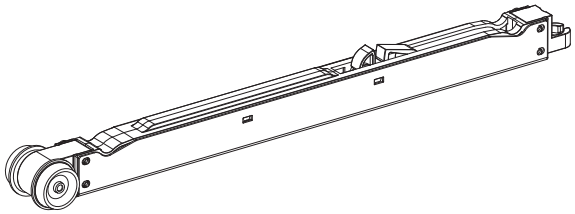

i One side

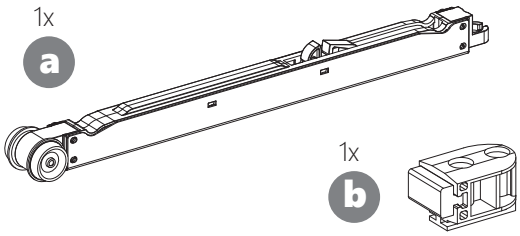

Double side

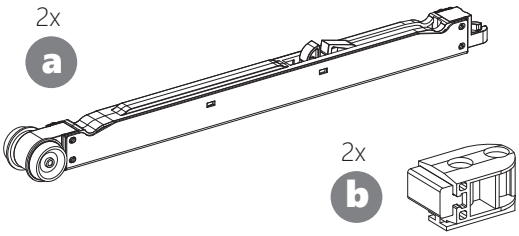

i Min. door width of one side softclose: 24" (610 mm)

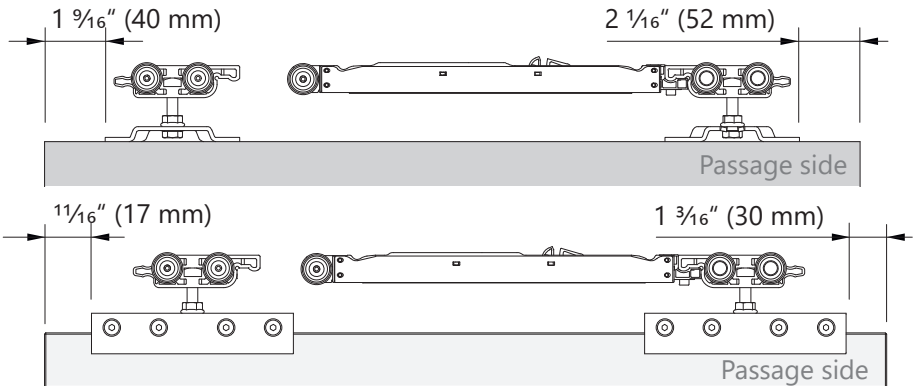

When using a push to open, consult the separatly enclosed installation instructions.

Min. door width of double side softclose: 34" (863 mm)

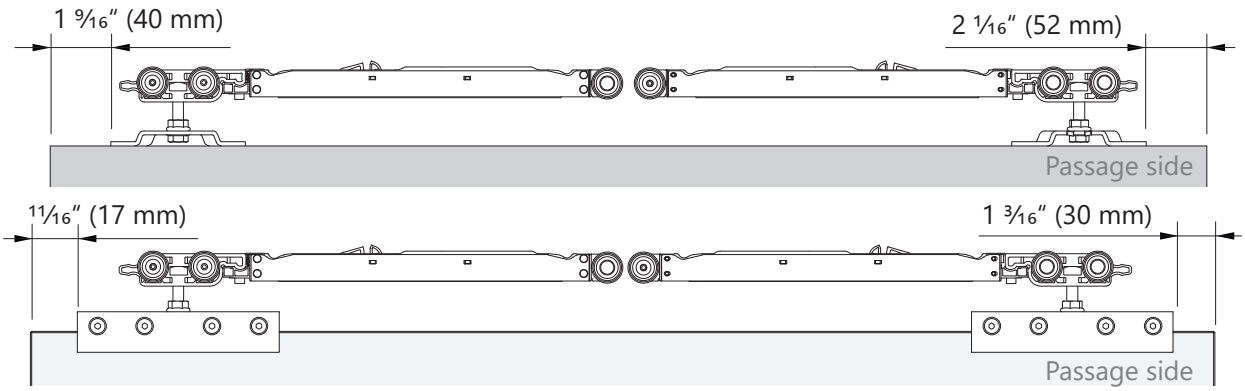

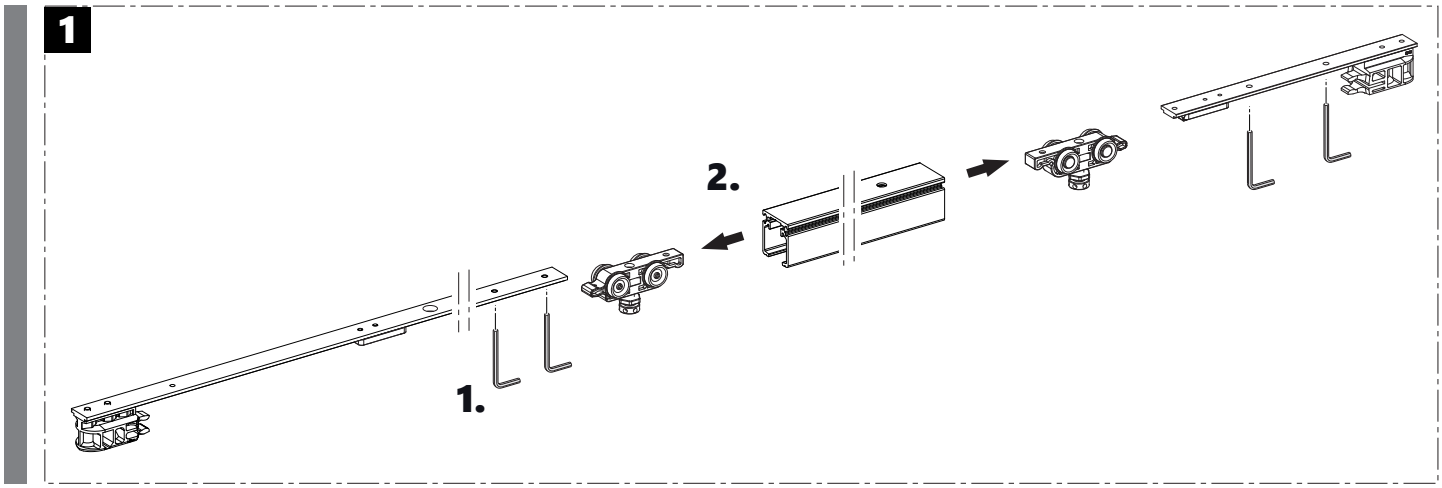

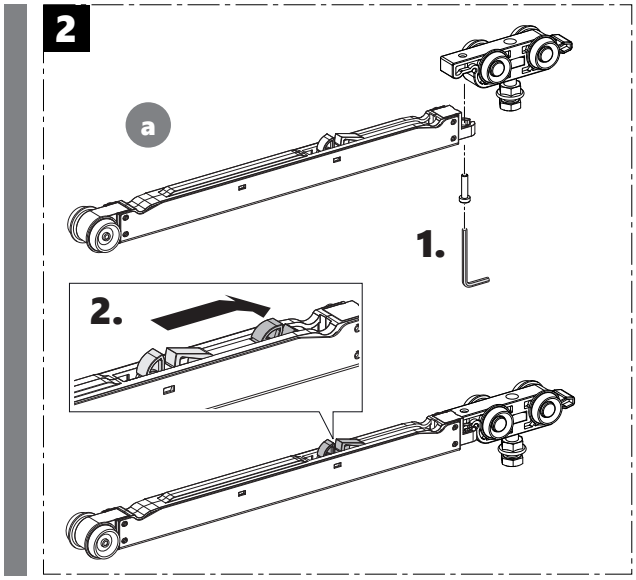

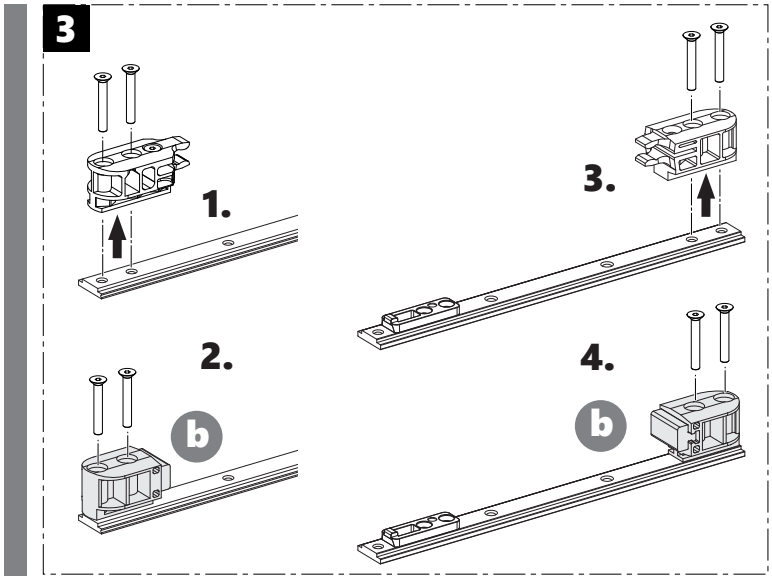

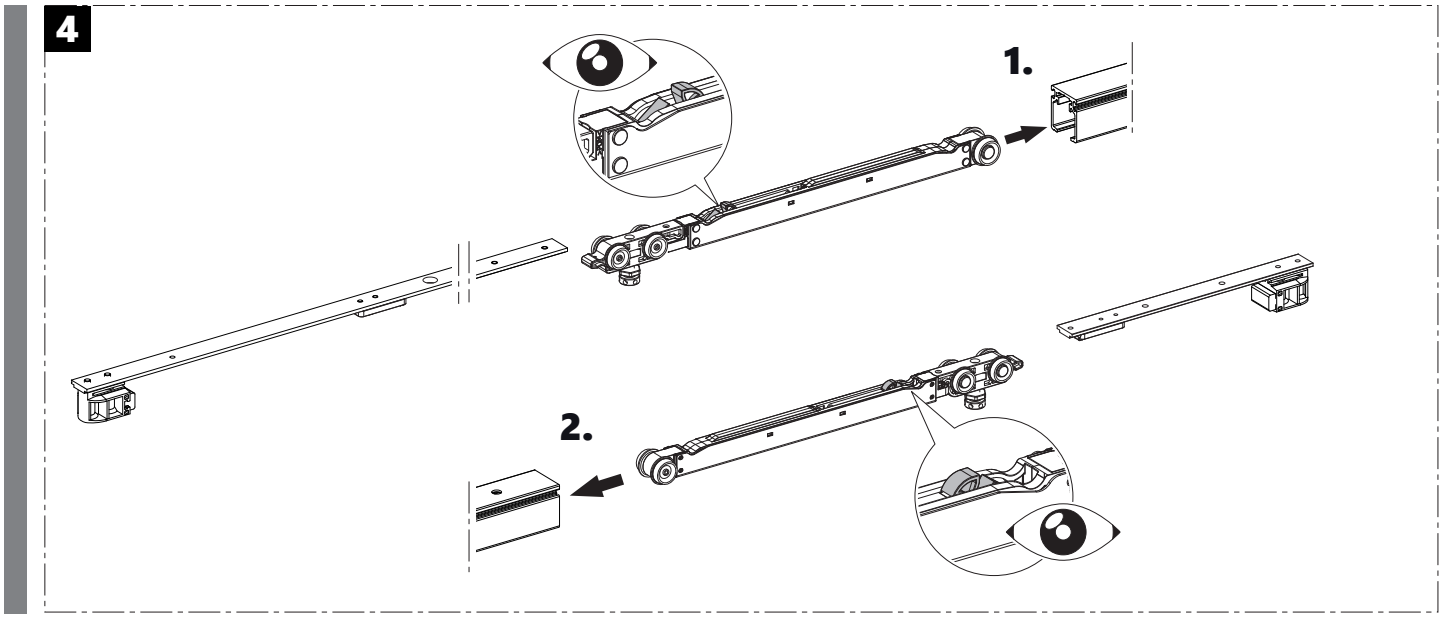

FALKENSTEIN a brand of Bartels USA, Inc.
1901 Tigertail Blvd, Dania Beach, FL 33004

T: 786-791-8557
E: sales@falkenstein-doors.com

09/11/2023