INSTALLATION INSTRUCTION

SMART track

FALKENSTEIN

Push to open
for sliding doors
starting at 24" (610 mm)
up to 176 lb (80 kg)

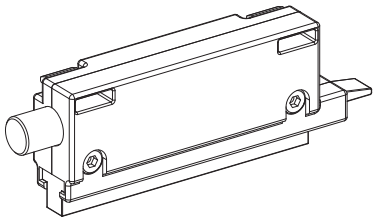

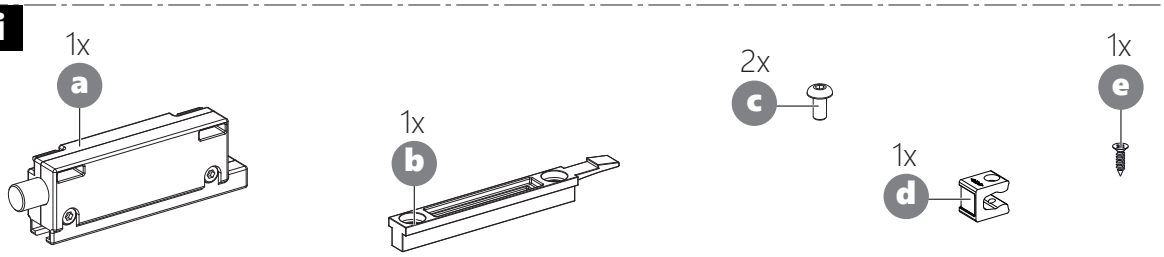

Push to open with softclose

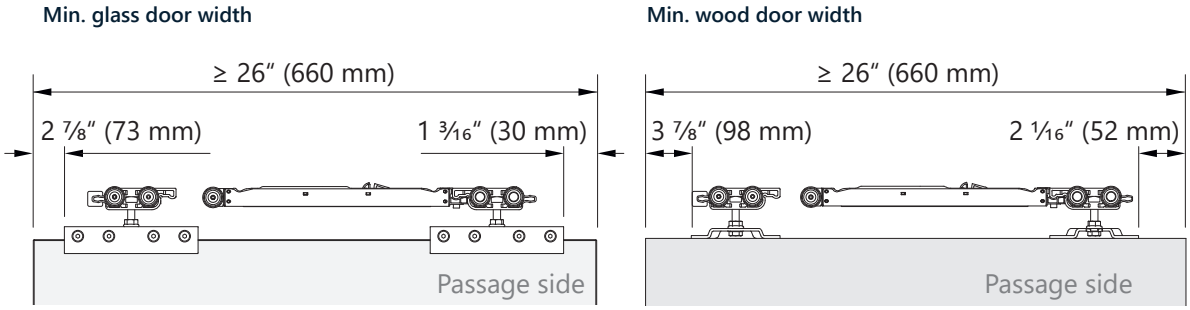

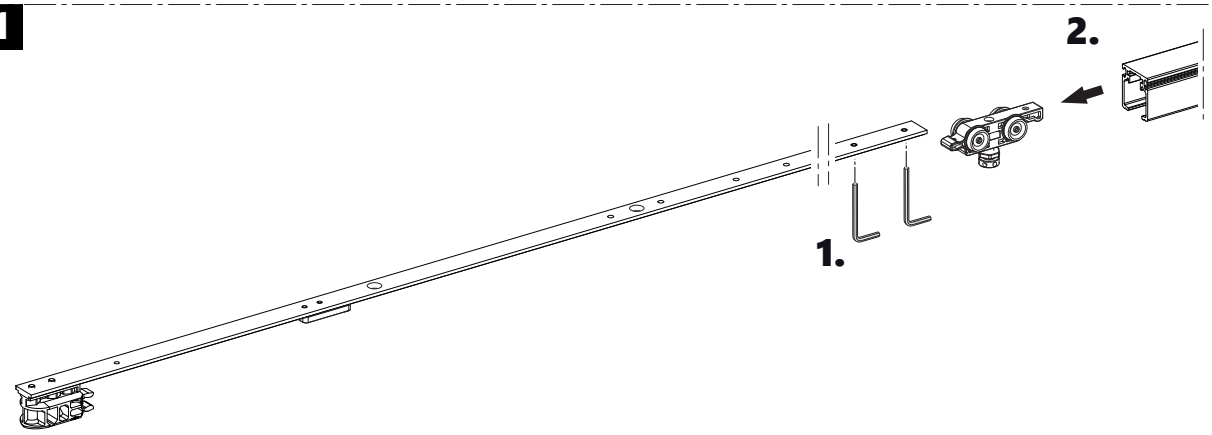

FALKENSTEIN

2

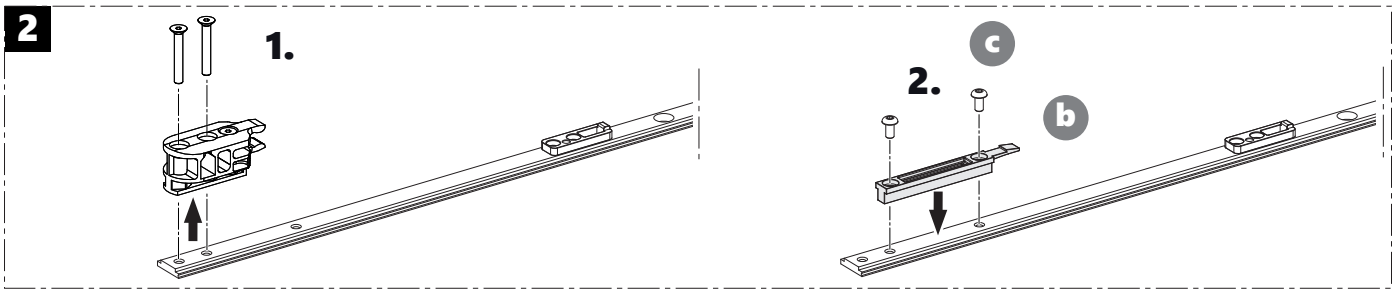

3

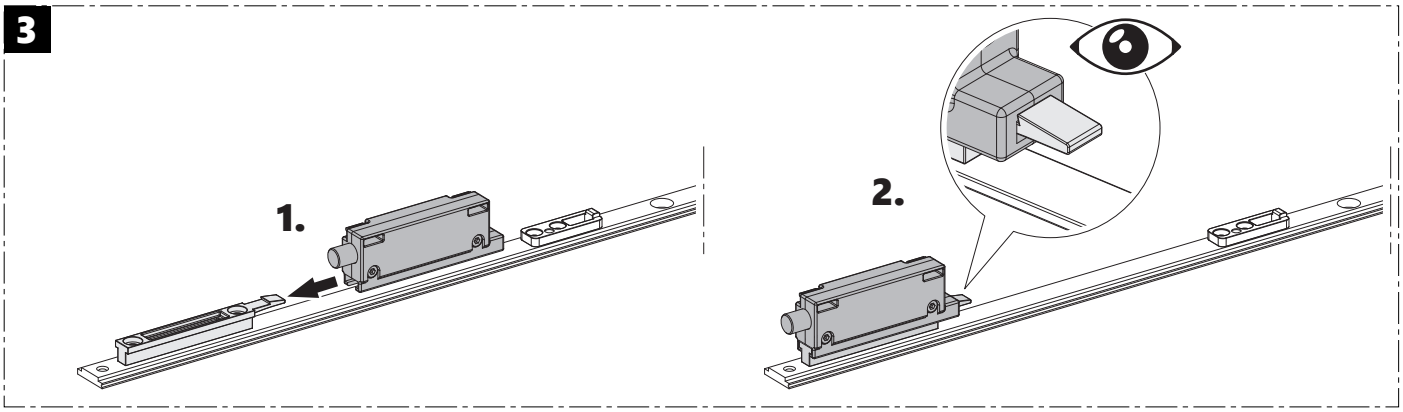

4

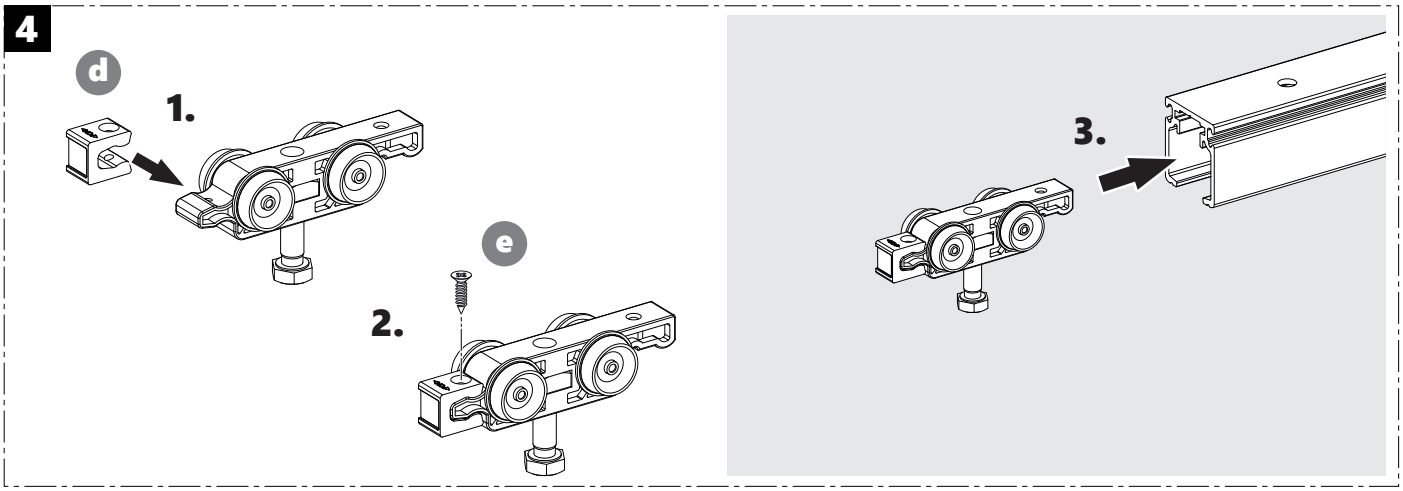

5

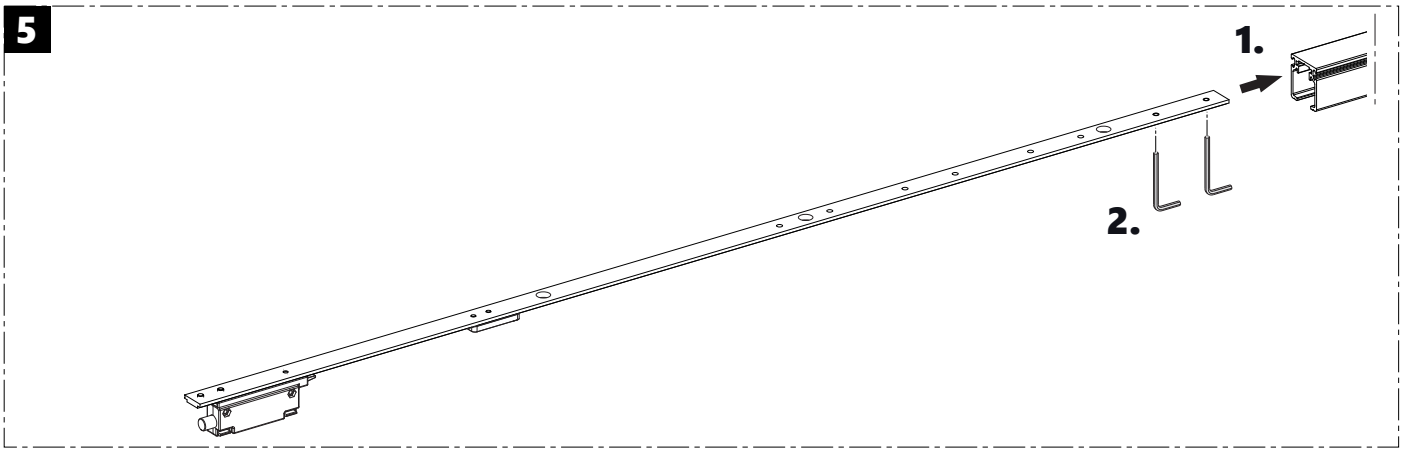

FALKENSTEIN a brand of Bartels USA, Inc.
1901 Tigertail Blvd, Dania Beach, FL 33004
T: 786-791-8557
E: sales@falkenstein-doors.com

09/11/2023